卡孚机械
CAFU MACHINERY

Bucket Elevator Vertical

Xiamen Cafu Mechanical Equipment Co., Ltd

Add:1802, No.2567, Binhai West Avenue, Tong'an District, Xiamen, China

E-mail:sales@xmcafu.com

Tel:+86-592-7010098、+86-18120740098(WhatsApp)

TD Type Belt Bucket Elevator

TD型胶带斗式提升机

产品描述 Product Description

TD型胶带斗式提升机适用于垂直输送粉状、粒状及小块状且磨琢性较小的散状物料，提升高度最大40m，TD型与传统D型斗式提升机相比，输送效率高，料斗型式多，应优先选用。

TD type belt bucket elevator is suitable for vertically conveying powdery, granular and small pieces of bulk materials with small abrasive, and the lifting height is up to 40m. Compared with the traditional D type bucket elevator, TD tpye has higher conveying efficiency and more hopper types, so it should be preferred.

产品特点 Feature

- 驱动功率小，采用挖取式装料，离心式卸料、大容量的料斗密集型布置。在物料提升时几乎无回料现象,因此无效功率少。
- 提升范围广，这类提升机对物料的种类、特性要求少，不但能提升一般粉状、小颗粒状物料，而且可提升磨琢性较大的物料。密封性好，环境污染少。
- 运行可靠性好，先进的设计原理和加工方法，保证了整机运行的可靠性，无故障时间超过2万小时。提升高度高。提升机运行平稳，因此可达到较高的提升高度。
- 使用寿命长，提升机在运行期间很少发生挤压和碰撞现象。本机在设计时保证物料在喂料、卸料时少有撒落，减少了机械磨损。

- Low-energy, adopt excavating type to load the material, centrifugal discharge, large capacity buckets intensive layout.There is almost no feedback phenomenon when rising, so the invalid power is less.
- The application scope is wide, and this kind of bucket elevator has few requirements on the types and characteristics of materials. Not only it can lift the general powdery and small granular materials, but also lift the materials with greater grinding ability. Good sealing, less environmental pollution.
- Good operation reliability, advanced design principle and processing method, to ensure the reliability of the machine operation, trouble-free time more than 20,000 hours.High lifting height. The bucket elevator operates smoothly, thus achieving high lifting height.
- Long service life, there's less the phenomenon of extrusion and collisionthe when bucket elevator in the operation .The machine is designed to ensure that the materials do not scatter when feeding and discharging, thus reducing mechanical wear.

应用范围 Application Range

应用于煤、水泥、生料、矿渣、碎石、砂、化肥、粮食等的提升运输。

It is used for lifting and transportation of coal, cement, raw material, slag, gravel, sand, fertilizer and grain.

技术参数 Technical Parameter

规格型号 Model	TD160		TD250		TD315		TD400		TD500		TD630
料斗形式 Bucket type	Q	S	Q	S	Q	S	Q	S	Q	S	S
输送量（m^3/h） Capacity	7	9.2	18	21	27.5	32	43.8	50.5	71	95	106
斗宽（mm） Backet Width	160		250		315		400		500		630
满斗斗容（L） Backet Volume	1.34	1.45	3.3	3.7	6.5	7.2	10.3	11.6	19.6		30.8
斗距（mm） Backet Pitch	350		360		500		500		680	500	680
带宽（mm） Belt Width	200		280		350		481		550		680
斗速（m/s） Speed	1.25		1.25		1.3		1.3		1.4		1.4

外形结构图 Configuration Drawing

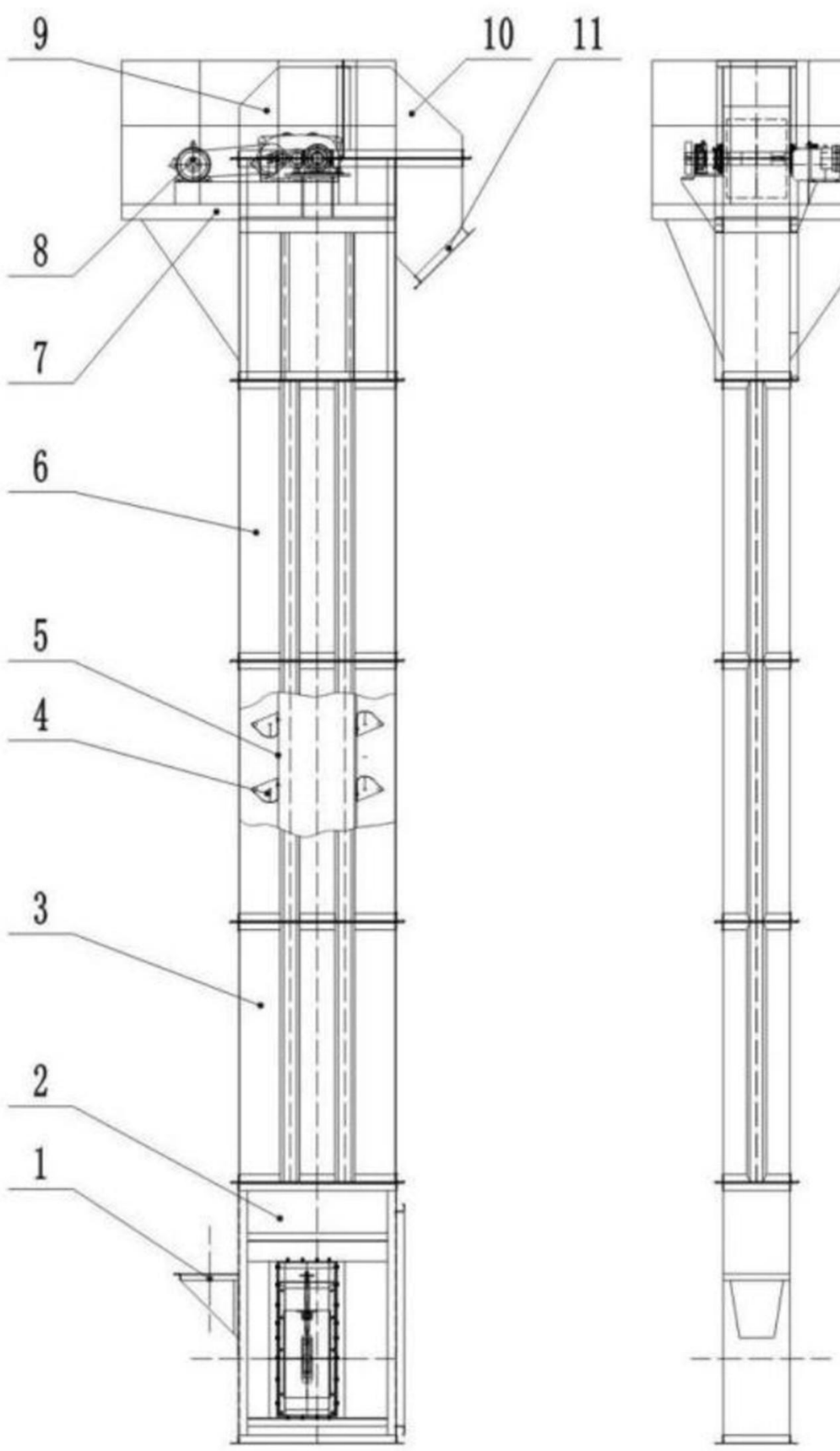

1、进料口 2、下箱总成 3、标准箱体 4、料斗
5、输送带 6、可调节箱体 7、检修平台 8、驱动装置
9、头部左护罩 10、头部右护罩 11、出料口

1、Inlet 2、Bottom box assemble
3、Middle box 4、Buckets 5、Lifting rubber belt
7、Maintenance platform 8、Motor and gearbox
10、top box cover 11、Outlet

TH Type Ring Chain Bucket Elevator

TH型环链斗式提升机

产品描述 Product Description

TH型环链斗式提升机采用混合式或重力卸料，挖取式装料，牵引件用优质合金钢高度圆环链，使用寿命长，轮缘更换工作简便，下部采用重力自动张紧和丝杠张紧装置，能保持恒定的张紧力，避免打滑或脱链，同时料斗遇到偶然因素引起的卡壳现象时有一定的容让性，能够有效地保护下部轴等部件。

TH type ring chain bucket elevator adopts mixed or gravity discharge, digging type loading, high-quality alloy steel ring chain for traction parts, long service life, easy replacement of sprocket, and gravity automatic tensioning device for the lower part. It can maintain a constant tension, avoid slipping or off-chain, and at the same time, the hopper has a certain tolerance when it encounters the jamming phenomenon caused by accidental factors, which can effectively protect the lower shaft and other components.

产品特点 Feature

- 维护方便，寿命长。
- 机壳钢板加厚、刚性好。
- 提升高度运行平稳可靠，噪音小，维护方便。
- 提升机环链采用低合金钢锻造，并经渗碳淬火处理，具有极高的抗拉强度和耐磨性能。

- Easy maintenance and long service life.
- The casing steel plate is thickened and has good rigidity.
- The lifting process runs smoothly and reliably, with low noise and easy maintenance.
- The ring chain is forged with low alloy steel and carburized and quenched. It has extremely high tensile strength and wear resistance.

应用范围 Application Range

适用于各种散状物料的垂直输送，物料温度在250℃以下，堆积密度小于1.5t/m³且易于掏取的粉状、粒状、小块状物料，如煤、水泥、碎石、砂子、化肥、粮食等。

It is suitable for vertical conveying all kinds of powdery, granular, and small bulk materials with temperature below 250℃, bulk density less than 1.5t/m3, and easy to excavating. Such as coal, cement, crushed stone, sand, chemical fertilizers, grain, etc.

技术参数 Technical Parameter

规格型号 Model	TH160		TH250				TH315		TH400		TH500		TH630
料斗形式 Bucket type	Q	S	Q	S	Q	S	Q	S	Q	S	S		S
输送量（m^3/h） Capacity	6	8	16	19	12	15	27.5	32	43.8	50.5	71	95	106
斗宽（mm） Bucket Width	160		250				315		400		500		630
满斗斗容（L） Bucket Volume	1.34	1.45	3.3	3.7	3.3	3.7	6.5	7.2	10.3	11.6	19.6		30.8
斗距（mm） Bucket Pitch	400		400		498		500		500		680	500	680
链条规格 Specification Of Chain	Φ14×50×7		Φ14×50×7		Φ18×64×7		Φ18×64×7		Φ22×86×7		Φ18×64×7		Φ22×86×7
斗速（m/s） Speed	1.25		1.25		1.25		1.3		1.3		1.4		1.4

外形结构图 Configuration Drawing

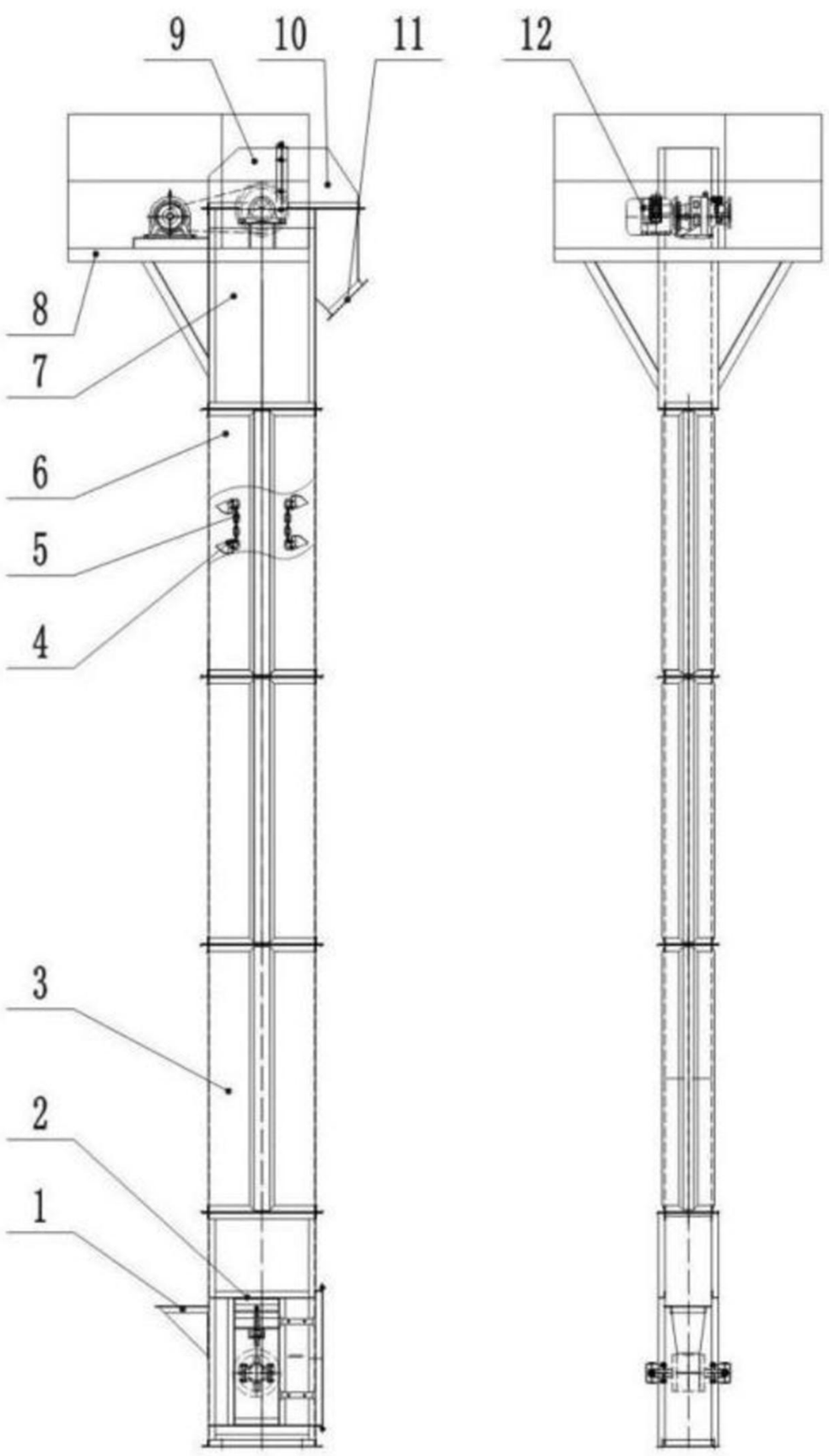

1、进料口 2、下相总成 3、标准箱体 4、料斗 5、环链
6、调节节箱体 7、上箱总成 8、检修平台 9、左头部护罩
10、右头部护罩 11、出料口 12、驱动装置

1、 Inlet 2.Bottom box assemble 3、Middle box
4、Buckets 5、chain 7、upper box assemble
8、Maintenance platform 9、top box cover
11、Outlet 12、Motor and gearbox

TDG/THG Type Efficient Bucket Elevator

TDG/THG型高效斗式提升机

产品描述 Product Description

TDG/THG型高效斗式提升机是引进世界先进技术设计制造的新型产品，它可以满足市场对大输送量、大提升高度及结构紧凑的新型高效斗提机的需要。

Efficient bucket elevator is a new product designed and manufactured by introducing the world's advanced tecchnology. It can meet the market's needs for new efficient bucket elevators with large conveying capacity, large lifting height and compact structure.

产品特点 Feature

- 输送量大、提升高度高、运行平稳。
- 其牵引件采用钢丝绳芯胶带，其特点拉伸强度高韧性好，不延伸，牵引件使用寿命可达五年以上。
- 采用离心混合式卸料，挖料式装料。

- Large capacity, high lifting height and stable operation.
- The traction part adopts steel wire core tape with characteristics of high tensile strength, good toughness, no extension. And the service life of traction parts can reach more than five years.
- Adopt centrifugal mixing type unloading and digging type loading.

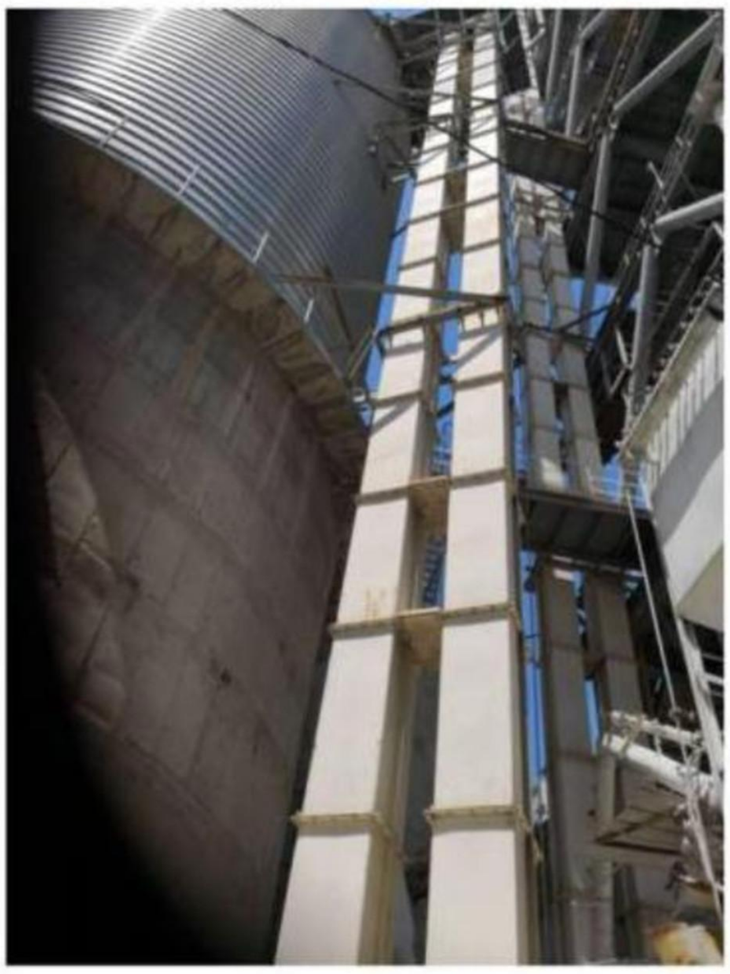

应用范围 Application Range

用于较干的散粒物料的垂直输送，可广泛地应用于建材化工、煤碳、电力、港口运输等行业的物料运输系统中。

It is used for the vertical transportation of dry bulk materials, and can be widely used in the material transportation system of building materials, chemical industry, coal, electricity, port transportation and other industries.

技术参数 Technical Parameter

型 号 Model	TDG250	TDG315	TDG400	TDG500	TDG630	TDG800	TDG1000	TDG1250	TDG1400	TDG1600
输送量（m^3/h）Capacity	46-65	102-133	135-175	177-228	250-327	321-416	459-600	645-850	840-1100	1020-1335
斗容（L）Bucket Volume	4.2	8.6	13.5	17.5	27.5	35	55	73	99	114
斗宽（mm）Bucket Width	250	315	400	500	630	800	1000	1250	1400	1600
斗距（mm）Bucket Pitch	350	350	420	420	520	520	650	720	760	820
斗速（m/s）Speed	1.5m/s	1.5m/s	1.5m/s	1.5m/s	1.7m/s	1.7m/s	1.7m/s	1.9m/s	1.9m/s	1.9m/s
提升高度（M）Uplifted Height	80	100	100	100	120	120	130	130	130	130

外形结构图 Configuration Drawing

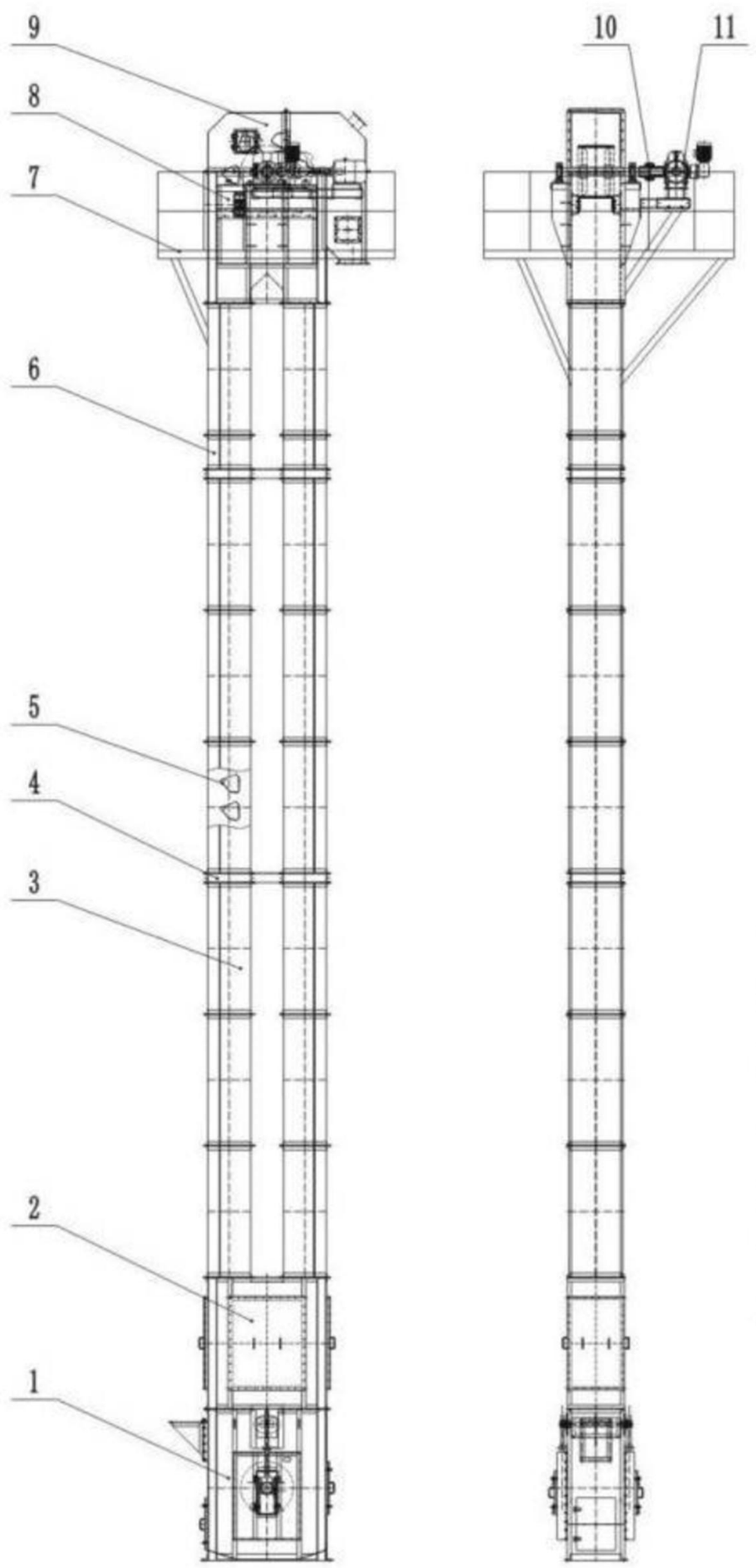

1、下部区段 2、检修节 3、标准中间节 4、连接节
5、胶带及料斗 6、调节节 7、检修平台 8、上部区段
9、上箱帽 10、联轴器 11、驱动装置

1、Bottom box assemble 2、Box with access door
3、Middle box 4、Connect box 5、lifting belt and buckets
7、Maintenance platform 8、Top box assemble
9、Top box cover 10、coupling 11、Motor and gearbox

NE Type Plate Chain Bucket Elevator

NE型板链斗式提升机

产品描述 Product Description

NE板链斗式提升机是引进先进技术研制、开发的产品，是板链式、重力诱导卸料的提升机设备。该机采用流入式喂料，物料流入料斗内靠板链提升到顶端，在物料重力作用下自行卸料。

NE plate chain bucket elevator is a product designed and developed by introducing advanced technology. It is a plate chain type, gravity-induced discharge elevator equipment. The machine adopts inflow feeding, the material is lifted to the top by the plate chain after flowing into the hopper, and it discharges itself under the gravity of the material.

产品特点 Feature

- 运行可靠，先进的设计原理，保证整机运行的可靠性，密封性好。
- 输送能力大，该系列提升机具有NE15～NE800多种规格提升量范围为15～800m3/h。

- Reliable operation. The advanced design principle guarantees the reliability of the whole machine and good sealing.
- Large conveying capacity. This series of bucket elevators have various specifications from NE15 to NE800, and the lifting capacity ranges from 15 to 800m3/h.

应用范围 Application Range

适用于垂直输送粉状、粒状、和块状物料，也可以提升磨琢性较大的物料，如粉煤灰、矿渣、石灰石、水泥生料、水泥熟料、水泥、煤、干粘土等。物料温度一般不超过200度，提升高度最高可达40m。

It is suitable for vertically conveying powdery, granular, and bulk materials, and can also lift materials with greater abrasive, such as fly ash, slag, limestone, raw cement, cement clinker, cement, coal, dry clay, etc. The temperature of the material to be lifted generally does not exceed 200 degrees, and the lifting height can be up to 40m.

技术参数 Technical Parameter

型 号 Model	提升量m^3/h Capacity	物料最大块度（mm） Max Granularity 允许占百分比% Allowable Percentage				
		10	25	50	75	100
NE15	16	65	50	40	30	25
NE30	31	90	75	58	47	40
NE50	50	90	75	58	47	40
NE100	110	130	105	80	65	55
NE150	165	130	105	80	65	70
NE200	210	170	135	100	85	70
NE300	300	170	135	100	85	70
NE400	380	205	165	125	105	90
NE500	470	240	190	145	120	100
NE600	600	240	190	145	120	100
NE800	800	275	220	165	135	110

外形结构图 Configuration Drawing

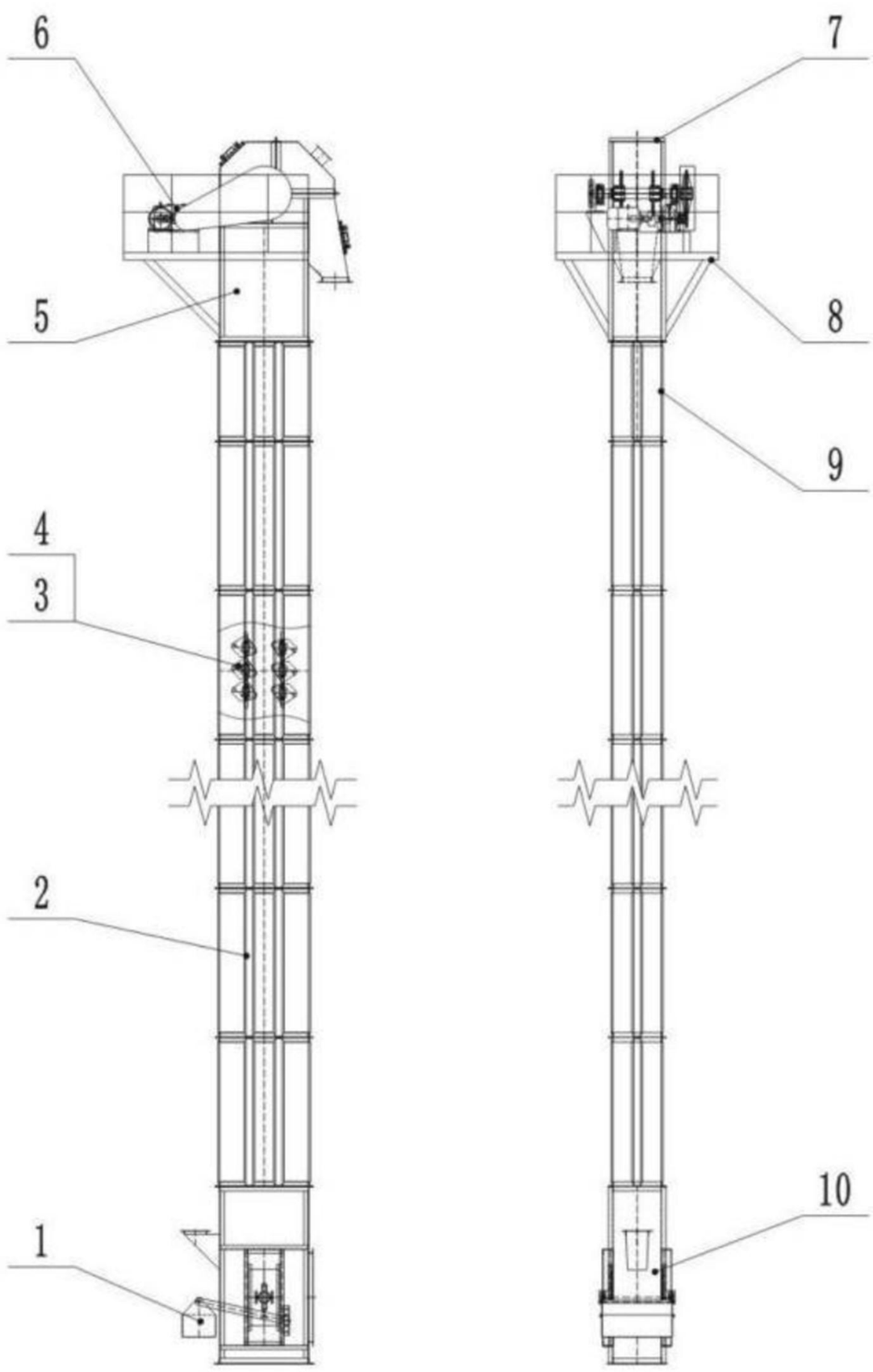

1、重锤张紧装置 2、标准中箱体 3、链条
4、链斗 5、上箱体 6、驱动装置
7、上箱帽 8、检修平台
9、调节中箱体 10、下箱体

1、 Gravity tensioning device 2、Middle box
3、Conveyor chain 4、Buckets 5、Top box
6、 Motor and gearbox 7、Top box cover
8、Maintenance platform 10、Bottom box

NSE Type High Speed Plate Chain Bucket Elevator

NSE型高速板链斗式提升机

产品描述 Product Description

NSE型高速板链斗式提升机是一种新型垂直提升设备，是在NE提升机的基础上进行设计改造，改造后在提升高度和输送量上都要大于同等型号的NE系列提升机。

NSE high-speed plate chain bucket elevator is a new type of vertical lifting equipment, which is designed and modified on the basis of the NE bucket elevator. After the improvement, the lifting height and delivery volume are greater than those of the NE series of the same model.

产品特点 Feature

- 提升范围广。不仅能提升一般粉料、小颗粒料，而且可提升磨琢性较大的物料，要求料温低于200℃，在额定输送量下，最大提升高度超过40米。
- 驱动功率小。采取流入式喂料、诱导式卸料，大容量的料斗密集型布置。在物料提升时，几乎无回料和挖料现象，因此无效功率省，比环链提升机节省功率30%。
- 使用寿命长。提升机的喂料采取流入式，无需用斗挖料，本机在设计时保证物料在喂、提升和卸料时少有撒落，减少了机械磨损。

- Wide range of conveying.It can not only lift the general powder, small particle material, but also the material with great abrasive. The material temperature is required to be lower than 200℃, and the maximum lifting height is more than 40 meters under the rated conveying capacity.
- Low driving power.Adopt inflow feeding, induction discharging, large-capacity hoppers intensive arrangement.In the material lifting, almost no material return and digging phenomenon, so less ineffective power, compared with the ring chain bucket elevator, its power saving 30%.
- Long service life.The feeding of the bucket elevator adopts the inflow type, and there is no need to use the bucket to excavate the material. There is seldom extrusion and collision between the materials. The machine is designed to ensure that the materials seldom fall out when feeding, lifting and discharging, thus reducing mechanical wear.

应用范围 Application Range

是应用最广泛的一种垂直提升设备，它被用来提升各种物料，如：矿石、煤、水泥熟料等。

It is one of the most widely used vertical lifting equipment. It is used to lift various materials, such as ore, coal, cement clinker, etc.

技术参数 Technical Parameter

型号 Model	最大提升量 m^3/h Capacity	运行速度 m/min Speed	物料最大块度（mm） Max Granularity 允许占百分比% Allowable Percentage				
			10	25	50	75	100
NSE100	170	66	35	30	20	15	10
NSE200	220	66	35	30	20	15	10
NSE300	300	66	35	30	20	15	10
NSE400	400	66	50	40	30	25	20
NSE500	500	66	50	40	30	25	20
NSE600	600	66	50	40	30	25	20
NSE700	700	66	65	60	40	35	30
NSE800	800	66	65	60	40	35	30
NSE1000	1000	66	65	60	40	35	30

注：最大提升量是用填充系数为0.65、链速为66m/min时计算。

外形结构图 Configuration Drawing

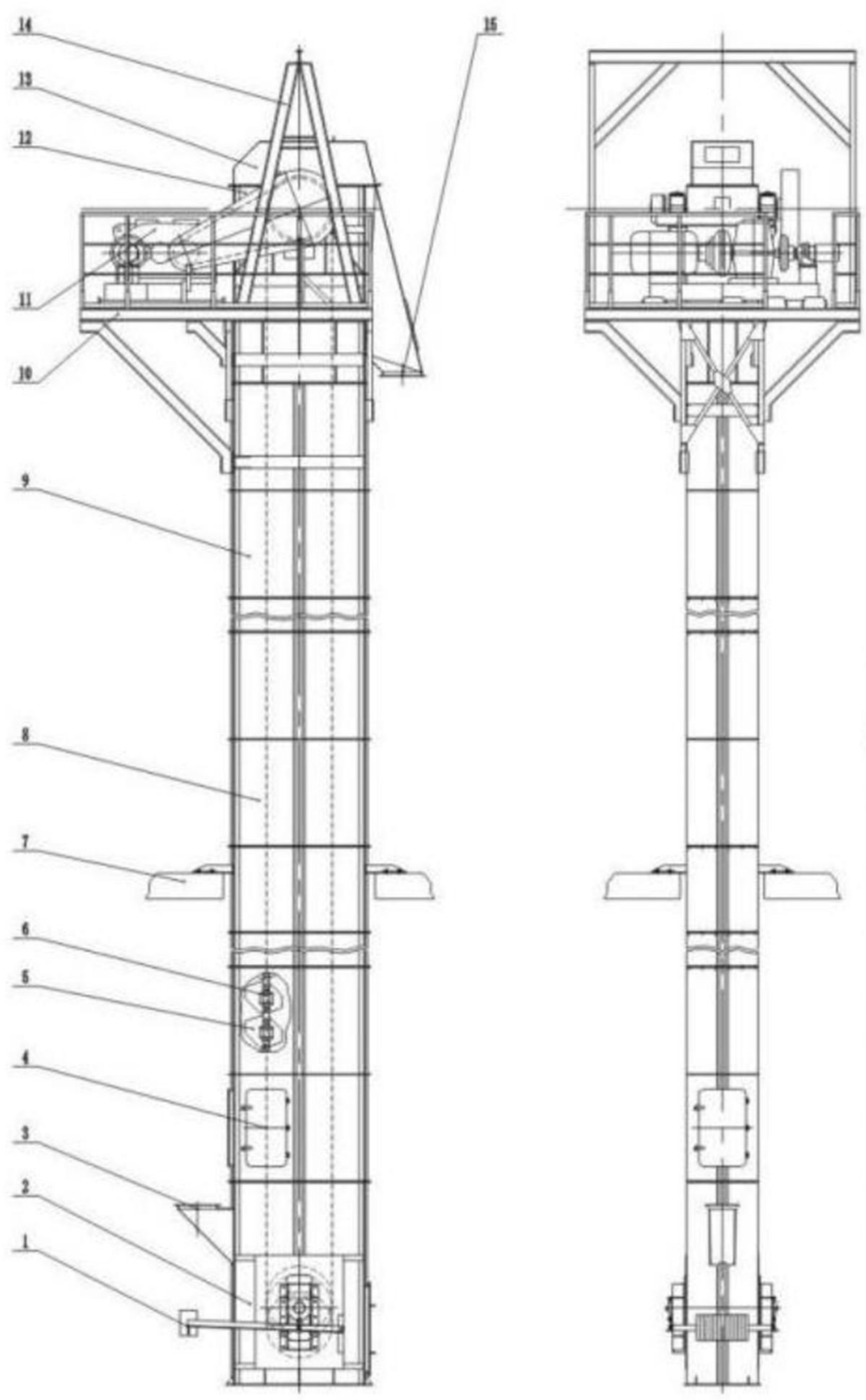

1、重锤张紧装置 2、下部箱体总成 3、进料口 4、带观察门标准箱体
5、料斗 6、板链输送带 7、中部支撑 8、标准箱体 9、调节箱体
10、检修平台 11、驱动装置 12、上部箱体总成 13、头部护罩
14、检修葫芦吊架 15、出料口

1、Gravity tensioning device 2、Bottom box assemble
3、Inlet 4、Midde box with inspection door
5、Buckets 6、Plate chain 8、Middle box
10、Maintenance platform. 11、Driving device
12、Top box assemble 13、Top box cover
14、Lifting frame 15、Outlet